Connection with isolator switch

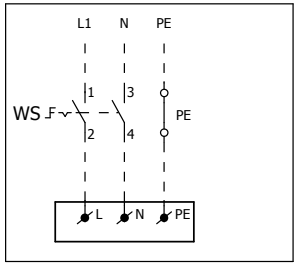

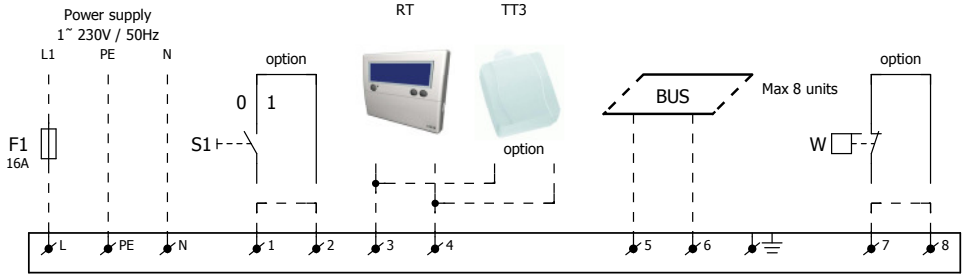

External connections

F1,F2	-	Fuse
GV1,GV2	-	Gasvalve
H1	-	Alarm light
IS	-	Ionization bar
K1	-	Relais fan (External)
PF	-	Pressure switch filter (when used)
VLV	-	Combustion air fan
RT	-	Digital room thermostat
S1	-	On/off switch (option)
S2	-	Reset button
TT1	-	Temperatursensor in the vicinity of the unit
TT2	-	System / maximum temperature sensor
TT3	-	Digital roomtemperature sensor (optional)
VM1	-	Fan motor 1
VM2	-	Fan motor 2 (GS+80, GS+100)
W	-	Condensation water sensor (option)
WS	-	Isolator switch

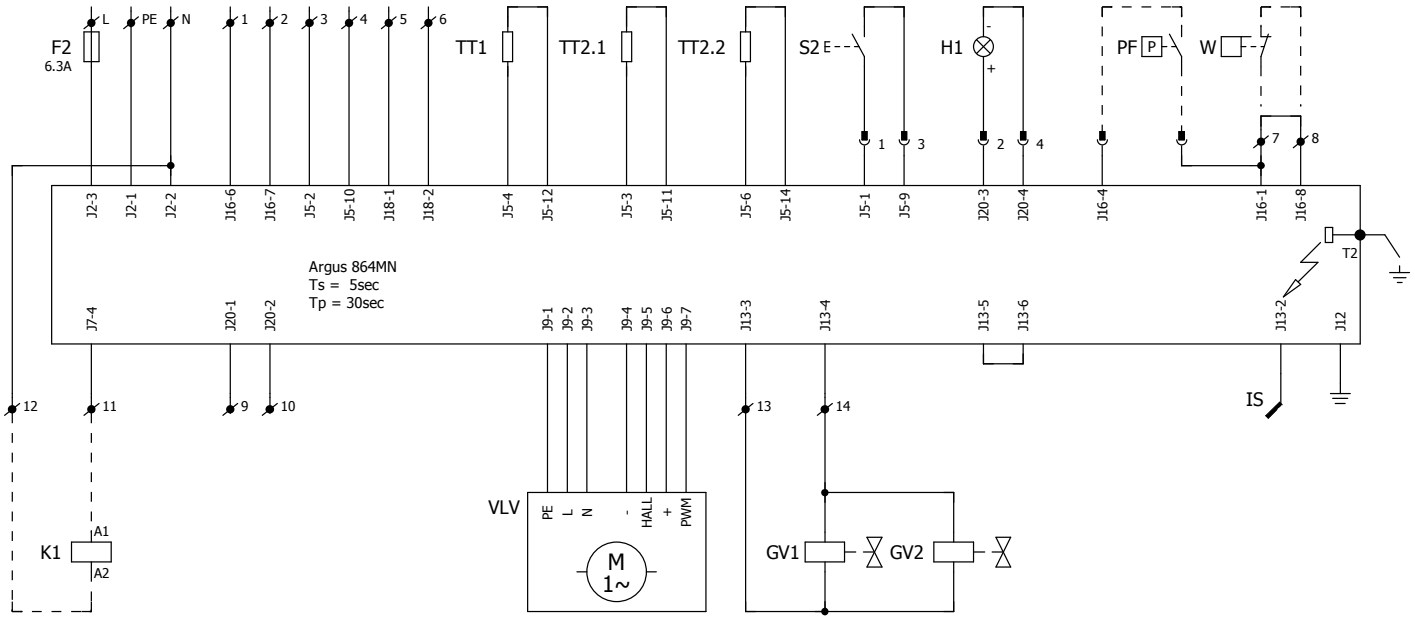

mark climate technology	G+ 15-100 // G+135 // G+200	Electrical drawing			Drawing number	WLV-012210-EN	
		Get.	J.W.	Date	8-9-2017	Group	WLV	Type	GS+	1
		Gec.	TvD	Norm		Art.nr.		Version	1.0	